Cambridge Assessment International Education

Cambridge IGCSE™

CANDIDATE NAME	

CENTRE NUMBER						CANDIDATE NUMBER				

DESIGN & TECHNOLOGY **0445/42**

Paper 4 Systems & Control **May/June 2023**

1 hour

You must answer on the question paper.

No additional materials are needed.

INSTRUCTIONS

- Section A: answer **all** questions.
- Section B: answer **one** question.
- Use a black or dark blue pen. You may use an HB pencil for any diagrams or graphs.
- Write your name, centre number and candidate number in the boxes at the top of the page.
- Answer in the space provided.
- Do **not** use an erasable pen or correction fluid.
- Do **not** write on any bar codes.
- You may use a calculator.

INFORMATION

- The total mark for this paper is 50.
- The number of marks for each question or part question is shown in brackets [ ].
- All dimensions are in millimetres.

This document has **20** pages. Any blank pages are indicated.

DC (KN/SG) 317236/1
© UCLES 2023

Section A

Answer **all** questions in this section.

1 Identify **two** fossil fuels from the list below.

coal **geothermal** **hydroelectric** **natural gas** **solar**

1 .....

2 .....
[2]

2 Give **two** reasons why many products are designed with a limited lifetime.

1 .....

.....

2 .....

.....
[2]

3 Name the types of structure shown in Fig. 3.1.

reservoir overflow steps

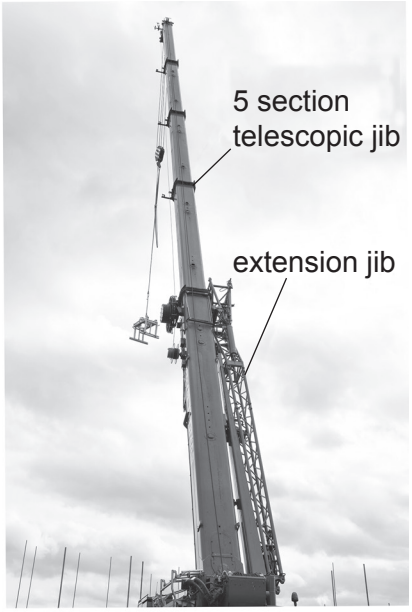

mobile crane

Fig. 3.1

reservoir overflow steps .....

5 section telescopic jib .....

extension jib .....
[3]

4 Fig. 4.1 shows a beam that will be used in a structure.

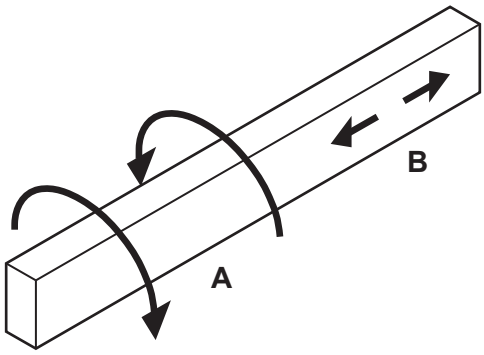

Fig. 4.1

Name the forces acting on the beam indicated by the arrows in Fig. 4.1.

A .....

B .....
[2]

5 Fig. 5.1 shows a mechanism made up of different linkages.

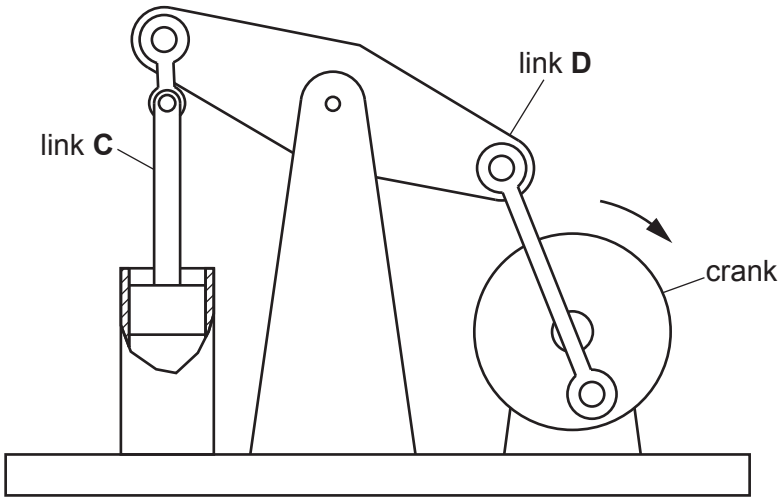

Fig. 5.1

(a) State the type of motion of link **C** when the crank is turned.

..... [1]

(b) State the type of motion of link **D** when the crank is turned.

..... [1]

(c) Give **two** reasons for providing lubrication to the linkages.

1 .....

.....

2 .....

.....

[2]

6 Fig. 6.1 shows two spur gears.

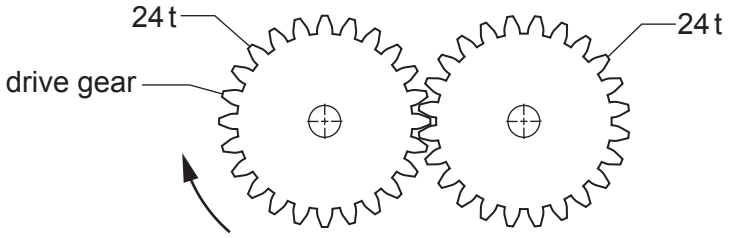

Fig. 6.1

State **two** results of rotating the drive gear in the direction shown.

1 .....

.....

2 .....

.....

[2]

7 Name the electronic symbols shown in Fig. 7.1.

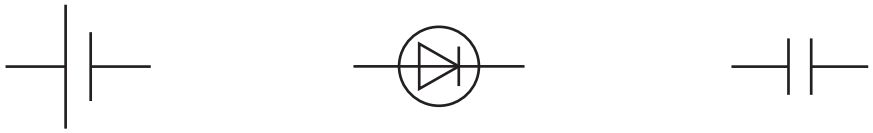

....

[3]

Fig. 7.1

8 Fig. 8.1 shows a toggle switch.

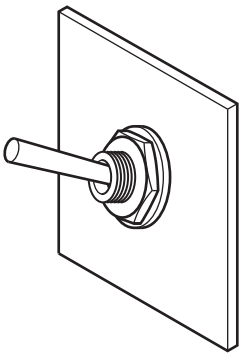

Fig. 8.1

(a) Describe the function of a toggle switch used to control a light.

.....

.....

..... [2]

(b) **(i)** Give **one** reason why a toggle switch would be unsuitable for use on a doorbell.

..... [1]

(ii) Name a type of switch that would be suitable for use on a doorbell.

..... [1]

9 The list below shows abbreviations for multiple and sub-multiple units of capacitance.

F **pF** **μF** **nF**

Arrange the units in Table 9.1 in order of size.

Table 9.1

smallest					largest

[3]

Section B

Answer **one** question from this section.

10 Fig. 10.1 shows an adjustable steel trestle used by builders to reach heights safely.
When in use wooden planks are rested on a pair of trestles.

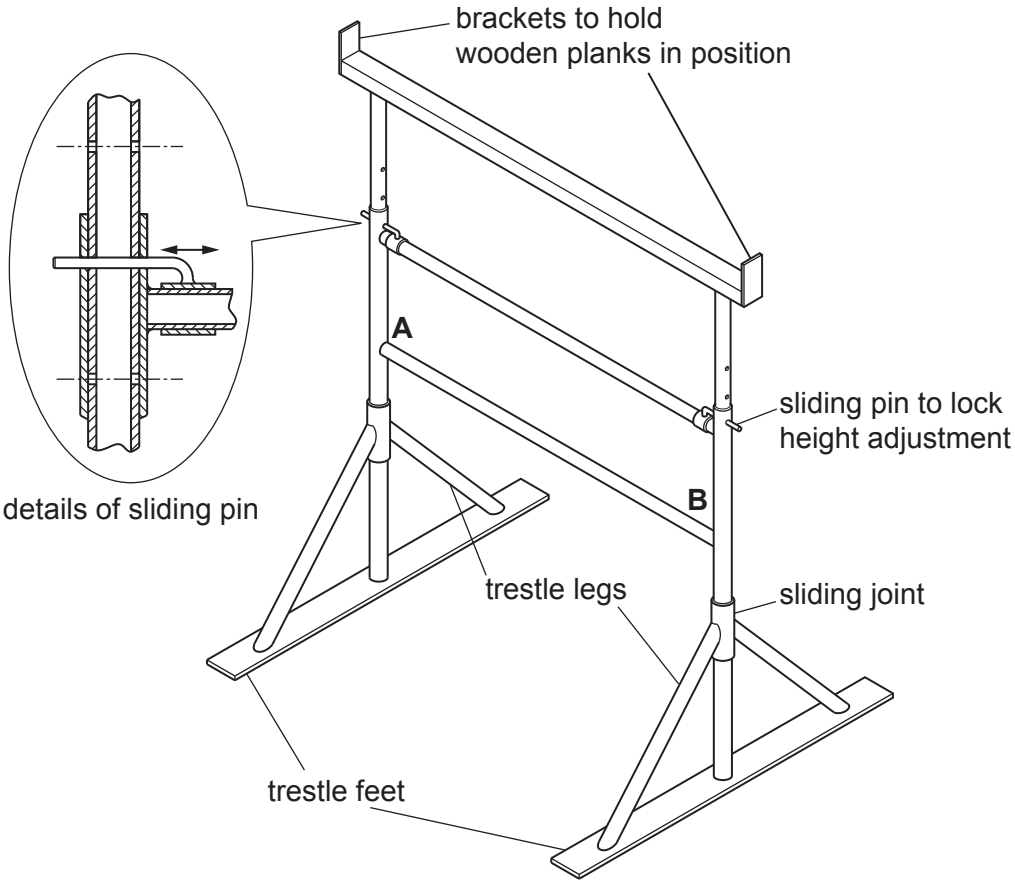

Fig. 10.1

(a) **(i)** State **two** design features that ensure the trestle is safe and secure.

1 .....

2 .....
[2]

(ii) The trestle is made from mild steel.
State **one** method of protecting mild steel from corrosion.

..... [1]

(iii) Each of the trestle legs is removable.
Give **two** benefits of having removable legs on the trestle.

1 .....

2 .....
[2]

(iv) A part view of joints **A** and **B** of the trestle frame is shown in Fig. 10.2.
Use sketches to show a gusset plate at point **A** and a strut at point **B**, positioned to reduce any movement in the frame of the trestle.
Add notes to show how the gusset plate and strut will be fixed in position.

Fig. 10.2

[4]

(v) The trestle is designed for use on level ground.
Use sketches and notes to show a change to the design of the trestle feet that will provide adjustment so that the trestle can remain stable on uneven ground.

[3]

(vi) Fig. 10.3 shows two trestles with loads acting on the planks spanning the trestles.

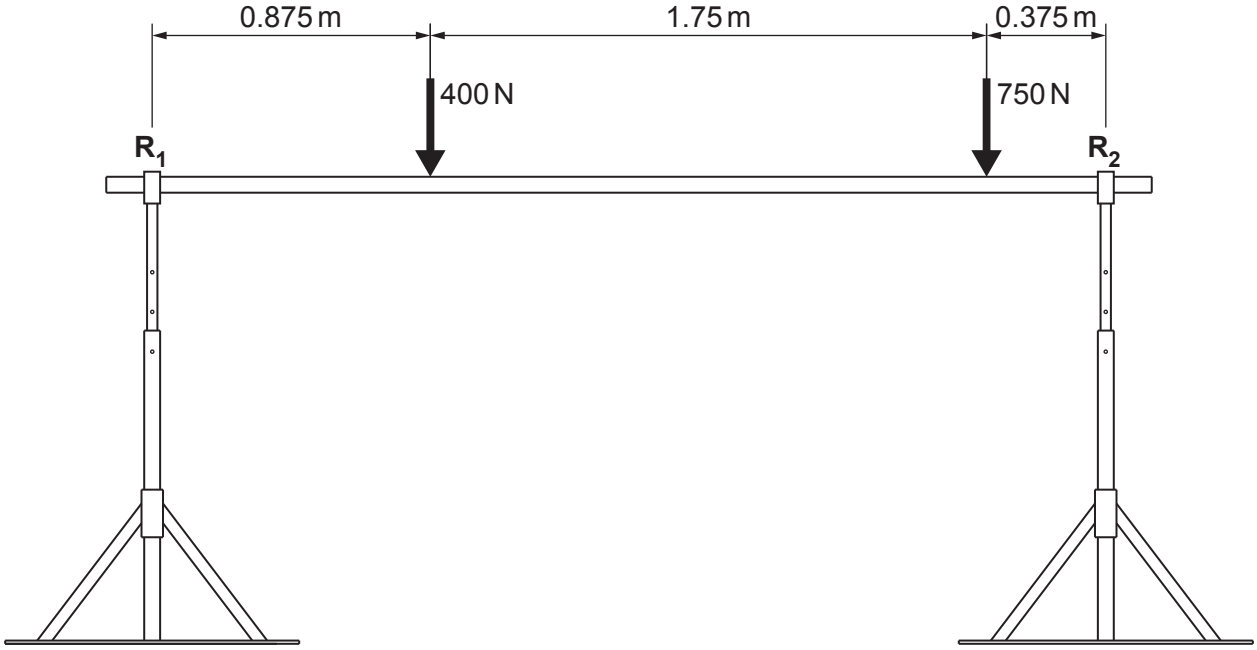

Fig. 10.3

Calculate the reaction at $\mathbf{R_1}$ and $\mathbf{R_2}$ on the trestles.

.....

.....

.....

.....

..... [4]

(b) Fig. 10.4 shows a hollow steel lintel used to provide support above an opening in a building.

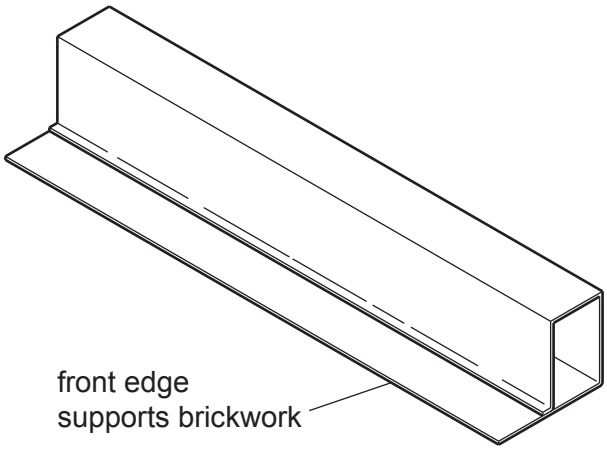

Fig. 10.4

(i) Give **two** benefits of using a hollow steel lintel.

1 .....

.....

2 .....

.....
[2]

(ii) Fig. 10.5 shows a section of brickwork supported by the lintel.

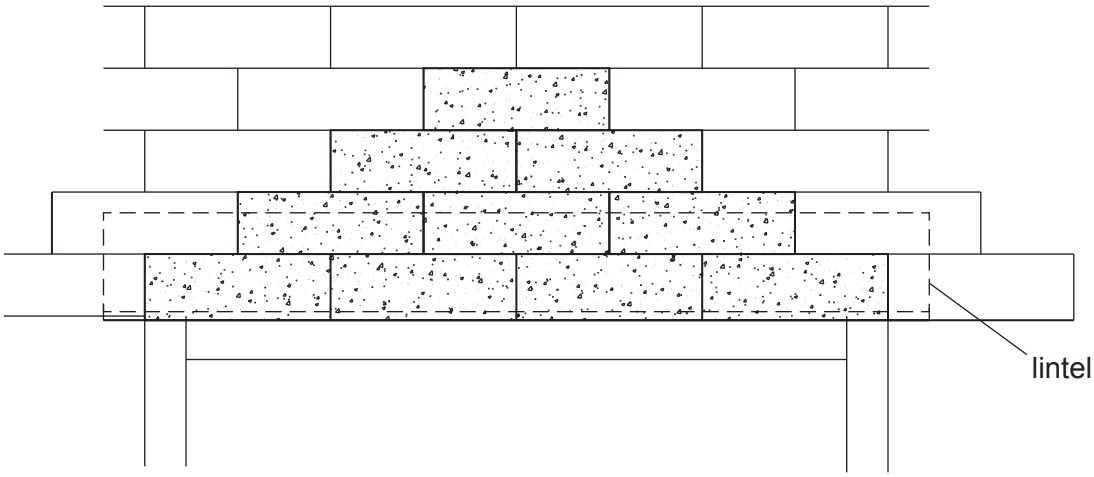

Fig. 10.5

Explain why the stationary load on the lintel is restricted to the shaded area of brickwork.

.....

.....

..... [2]

(c) Fig. 10.6 shows part of a fence structure made from steel wires, which will be held under tension. The top wire is shown in position before it is tensioned.

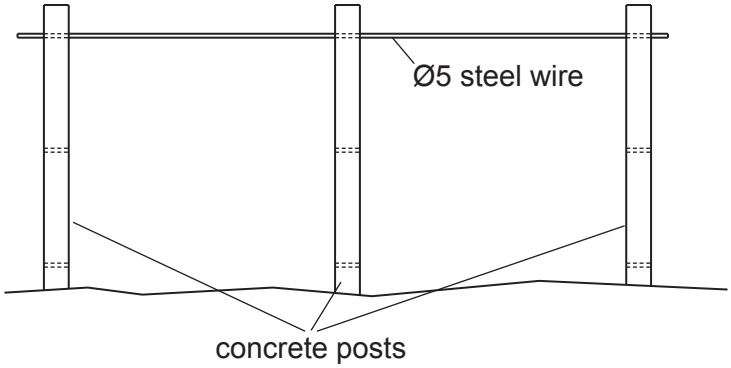

Fig. 10.6

(i) Use sketches and notes to show **one** method of applying tension to the wire when installing it.

[2]

(ii) Calculate the stress in the Ø5 steel wire when a tensile force of 3 kN is exerted on it.

Use the formula: Stress = $\frac{\text{force}}{\text{cross sectional area}}$

.....

.....

.....

.....

..... [3]

11 **(a)** Fig. 11.1 shows a part of a bicycle chain with four positions identified.

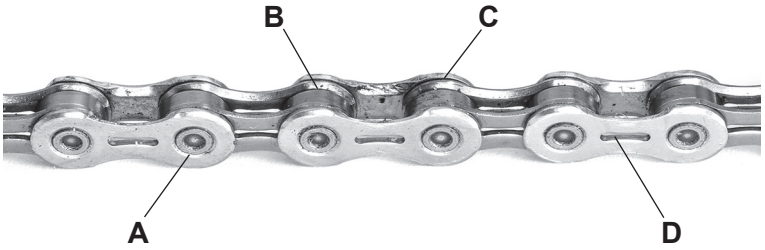

Fig. 11.1

(i) Give the **two** positions on Fig. 11.1 where lubrication should be applied.

1 .....

2 .....
[2]

(ii) Name the type of lubrication that would be suitable for the chain.

..... [1]

(iii) State the force that will be applied to the chain when it is used to drive a single sprocket.

..... [1]

(iv) Describe **one** advantage that a chain drive has when compared to spur gears.

.....

.....

..... [2]

(b) Fig. 11.2 shows a cam with the direction of rotation indicated.

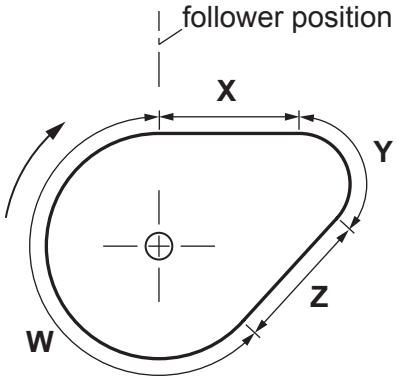

Fig. 11.2

(i) Complete Table 11.1 to show the positions of dwell, fall and rise on the cam.

Table 11.1

position on cam	type of movement
W	
Z	
Y	
X	

[4]

(ii) Use sketches and notes to show **two** types of follower that would be suitable for use with the cam.

[2]

(iii) State the type of cam that can only be rotated in one direction.

..... [1]

(iv) Explain why rotating the cam shown in Fig. 11.2 at high speed could result in loss of efficiency.

.....

.....

.....

..... [2]

(c) **(i)** Use sketches and notes to show the difference between axial load and radial load when using bearings.

[2]

(ii) Three different types of ball bearing are shown in Fig. 11.3.

A fixed in a cage

B loose in a cage

C sealed for life

Fig. 11.3

Give **one** benefit for each type of ball bearing.

A .....

B .....

C .....

[3]

(d) **(i)** Fig. 11.4 shows a woodworker's G cramp.

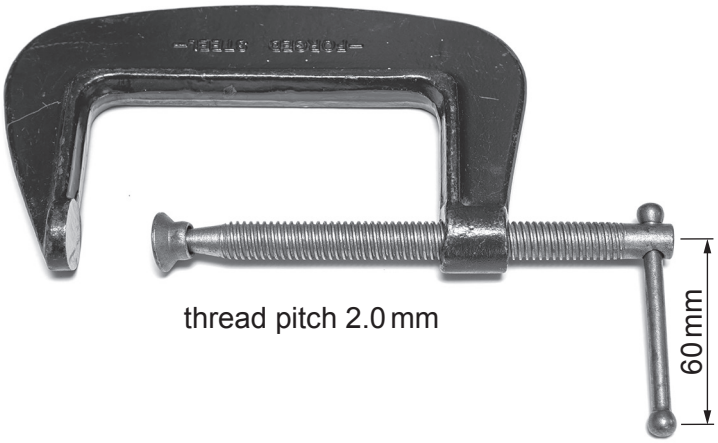

Fig. 11.4

Calculate the velocity ratio of the thread in the G cramp.

Use the formula: $VR = \frac{\text{distance moved by effort}}{\text{distance moved by load}}$

.....

.....

.....

..... [3]

(ii) State the conversion of motion that takes place when using screw threads.

..... to ..... [2]

12 **(a)** Fig. 12.1 shows a rechargeable cycle light which uses high intensity LEDs.

Fig. 12.1

(i) Give **two** benefits of using LEDs for the cycle light.

1 .....

2 .....
[2]

(ii) The LEDs flash on and off at regular intervals when the cycle light is switched on.
Name the type of circuit that will cause an output to flash on and off at regular intervals.

..... [1]

(iii) Fig. 12.2 shows a graph of the output signal for the flashing light.

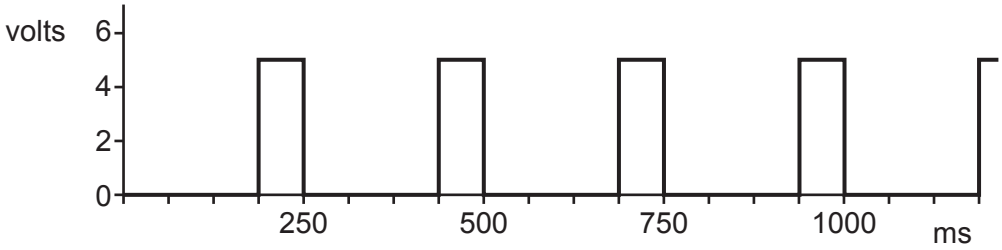

Fig. 12.2

From the information in Fig. 12.2 state the number of times that the LEDs will be on every second.

..... [1]

(iv) Name **two** integrated circuit devices that could be used to provide the flashing output signal.

1 .....

2 .....
[2]

(v) Fig. 12.3 shows the output circuit for the cycle light.

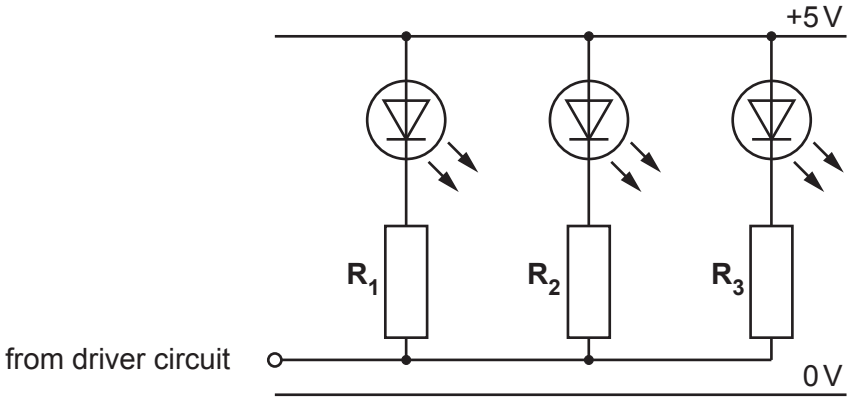

Fig. 12.3

State the method that has been used to connect the three LEDs to the circuit.

..... [1]

(vi) Each LED has a maximum current of 60 mA and a forward voltage of 2.0 V.
Calculate the value of resistor that should be used to limit the current through each LED to 60 mA.

.....

.....

.....

..... [3]

(b) Circuits constructed using a printed circuit board (PCB) will need the components to be soldered in place.

(i) Soldering can be a hazardous process.
Identify **two** hazards and the precautions that can be taken to overcome them.

hazard 1 .....

precaution .....

.....

hazard 2 .....

precaution .....

.....
[4]

(ii) The stages in fitting and soldering a fixed resistor to a PCB are given below.

allow joint to cool

bend resistor legs to secure in PCB

apply soldering iron tip to resistor leg and PCB pad

apply solder and allow to flow into joint

cut off spare wire from resistor leg

fit resistor into PCB

Table 12.1

stage	description of stage
1	*Fit resistor into PCB*
2	
3	
4	
5	
6	

Complete Table 12.1 by adding the stages in the correct order.
The first one has been done for you. [4]

(c) An alarm system has three inputs to it. Any one of the three inputs can trigger the alarm. Using only 2 input logic gates sketch an arrangement that can be used to provide a logic 1 output when any one of the inputs are at logic 1.

[3]

(d) Fig. 12.4 shows the circuit layout for a transistor switch and a single pole single throw (SPST) mechanical switch.

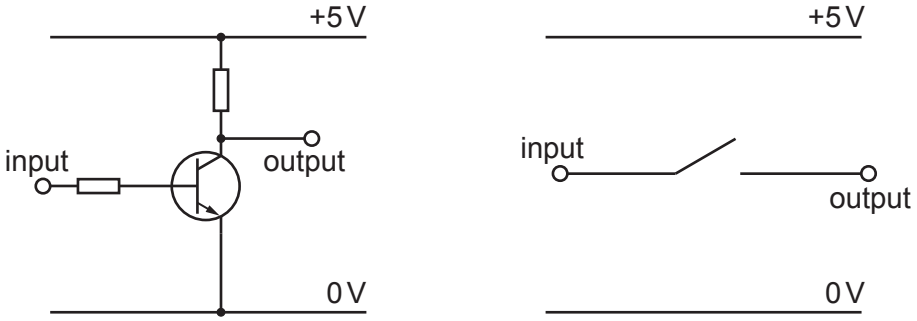

Fig. 12.4

(i) Describe **one** difference between the two methods of switching.

.....

.....

.....

..... [2]

(ii) Fig. 12.5 shows one method of identifying the correct holes in the PCB for the transistor legs to be placed in.

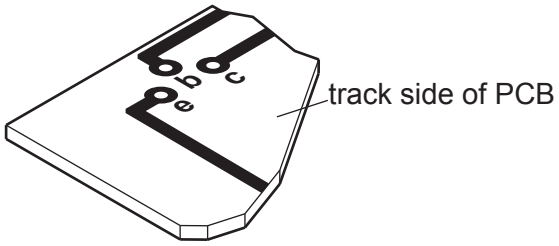

Fig. 12.5

Explain why this method is particularly useful when constructing a batch of circuits.

.....

.....

.....

..... [2]

BLANK PAGE

BLANK PAGE

Permission to reproduce items where third-party owned material protected by copyright is included has been sought and cleared where possible. Every reasonable effort has been made by the publisher (UCLES) to trace copyright holders, but if any items requiring clearance have unwittingly been included, the publisher will be pleased to make amends at the earliest possible opportunity.

To avoid the issue of disclosure of answer-related information to candidates, all copyright acknowledgements are reproduced online in the Cambridge Assessment International Education Copyright Acknowledgements Booklet. This is produced for each series of examinations and is freely available to download at www.cambridgeinternational.org after the live examination series.

Cambridge Assessment International Education is part of Cambridge Assessment. Cambridge Assessment is the brand name of the University of Cambridge Local Examinations Syndicate (UCLES), which is a department of the University of Cambridge.

© UCLES 2023